UCFB200 Series 带座外球面轴承

Flange Bracket-3 Bolt Unit

Mounted Ball Bearing Units

Wide Inner Race, Set Screw Locking, Normal Duty

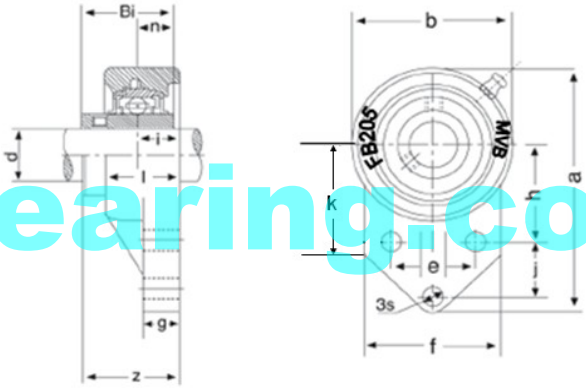

www.mvbbearing.com

MVB BearingUnit No.	Shaft Dia d (in)	Shaft Dia d (mm)	Dimensions inch mm a	b	k	f	l	s	g	h	j	e	i	z	Bi	n	Bolt Size inch mm	Bearing No.	Housing No.	Weight (kg)
UCFB201-8	1/2																	UC201-8		
UCFB202-9	9/16																	UC202-9		
UCFB202-10	5/8		4 11/32	2 7/16	2 1/16	2 1/16	1	25/64	1/2	1 21/32	1 1/16	1 17/64	19/32	1 5/16	1.22	0.5	5/16	UC202-10		
UCFB203-11	11/16																	UC203-11		
UCFB204-12	3/4																	UC204-12	FB204	0.58
UCFB201		12																UC201		
UCFB202		15	110	62	52	52	25.5	10	13	42	27	32	15	33.3	31	12.7	M8	UC202		
UCFB203		17																UC203		
UCFB204		20																UC204		
UCFB205-13	13/16																	UC205-13		
UCFB205-14	7/8		4 9/16	2 11/16	2 1/16	2 7/32	1 1/16	25/64	1/2	1 49/64	1 1/16	1 11/32	5/8	1 13/32	1.34	0.56	5/16	UC205-14		
UCFB205-15	15/16																	UC205-15	FB205	0.83
UCFB205-16	1																	UC205-16		
UCFB205		25	116	68	52	56	27	10	13	45	27	34	16	35.7	34	14.3	M8	UC205		
UCFB206-17	1-1/16																	UC206-17		
UCFB206-18	1-1/8		5 1/8	3 1/16	2 5/32	2 9/16	1 7/32	25/64	1/2	1 31/32	1 9/64	1 37/64	23/32	1 37/64	1.5	0.63	5/16	UC206-18		
UCFB206-19	1-3/16																	UC206-19	FB206	0.97
UCFB206-20	1-1/4																	UC206-20		
UCFB206		30	130	78	55	65	31	10	13	50	29	40	18	40.2	38.1	15.9	M8	UC206		
UCFB207-20	1-1/4																	UC207-20		
UCFB207-21	1-5/16		5 21/32	3 17/32	2 7/16	2 3/4	1 11/32	25/64	19/32	2 11/64	1 17/64	1 13/16	3/4	1 3/4	1.69	0.69	5/16	UC207-21		
UCFB207-22	1-3/8																	UC207-22	FB207	1.35
UCFB207-23	1-7/16																	UC207-23		
UCFB207		35	144	90	62	70	34	10	15	55	32	46	19	44.4	42.9	17.5	M8	UC207		
UCFB208-24	1-1/2		6 15/32	3 15/16	2 27/32	3 1/16	1 27/64	15/32	5/8	2 23/64	1 39/64	1 31/32	53/64	2 1/64	1.94	0.75	3/8	UC208-24		
UCFB208-25	1-9/16																	UC208-25	FB208	1.82
UCFB208		40	164	100	72	78	36	12	16	60	41	50	21	51.2	49.2	19	M10	UC208		
UCFB209-26	1-5/8																	UC209-26		
UCFB209-27	1-11/16		6 27/32	4 3/16	3	3 5/32	1 1/2	15/35	23/32	2 9/16	1 11/16	2 1/8	55/64	2 1/16	1.94	0.75	3/8	UC209-27	FB209	2.01
UCFB209-28	1-3/4																	UC209-28		
UCFB209		45	174	106	76	80	38	12	18	65	43	54	22	52.2	49.2	19	M10	UC209		
UCFB210-29	1-13/16																	UC210-29		
UCFB210-30	1-7/8		7 1/4	4 13/32	3 7/32	3 3/8	1 37/64	15/32	23/32	2 43/64	1 13/16	2 9/32	55/64	2 5/32	2.03	0.75	3/8	UC210-30		
UCFB210-31	1-15/16																	UC210-31	FB210	2.48
UCFB210-32	2																	UC210-32		
UCFB210		50	184	112	82	86	40	12	18	68	46	58	22	54.6	51.6	19	M10	UC210		
UCFB211-32	2																	UC211-32		
UCFB211-33	2-1/16		8 5/32	5 1/8	3 25/64	3 35/64	1 11/16	35/64	45/64	3 5/64	1 31/32	2 7/16	63/64	2 5/16	2.1890	0.874	7/16	UC211-33		
UCFB211-34	2-1/8																	UC211-34	FB211	3.31
UCFB211-35	2-3/16																	UC211-35		
UCFB211		55	207	130	86	90	4	14	18	78	50	62	25	58.4	55.6	22.2	M10	UC211		
UCFB212-36	2-1/4																	UC212-36		
UCFB212-37	2-5/16		8 5/32	5 1/2	3 35/64	3 45/64	1 7/8	35/64	45/64	3 5/16	2 11/64	2 19/32	1 9/64	2 23/32	2.5630	1.000	7/16	UC212-37		
UCFB212-38	2-3/8																	UC212-38	FB212	3.99
UCFB212-39	2-7/16																	UC212-39		
UCFB212		60	223	140	90	94	48	14	18	84	55	66	29	68.7	65.1	25.4	M10	UC212		
UCFB213-40	2-1/2		9 39/64	6 7/64	3 45/64	3 15/16	1 31/32	35/64	25/32	3 5/8	2 23/64	2 3/4	1 3/16	2 3/4	2.5630	1.000	7/16	UC213-40		
UCFB213-41	2-9/16																	UC213-41	FB213	4.94
UCFB213		65	244	155	94	100	50	14	20	92	60	70	30	69.7	35.1	25.4	M10	UC213		

MVB Power-Star Bearing Industry Co., Ltd. Tel: +86-592-523 0986 Fax: +86-592-376 1975
Url: www.mvbbearing.com Email: vivy@mvbbearing.com ; mvbbearing@gmail.com