SBF200 Series 带座外球面轴承

Square 4-Bolt Flange Units

Mounted Ball Bearing Units

Nerrow Inner Race, Set Screw Locking, Normal Duty

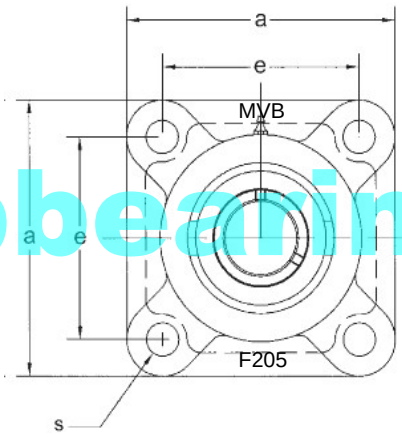

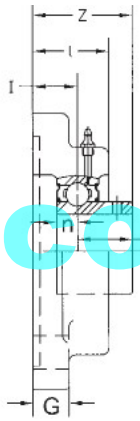

www.mvbbearing.com

MVB BearingUint No.	Shaft Dia d		Dimensinons (inch / mm)									Bolt Size		Bearing No.	Housing No.	Weight (kg)
	(in)	(mm)	a	e	i	g	l	s	z	Bi	n	(mm)	(in)			
SBF201-8	1/2													SB201-8		
SBF202-9	9/16													SB202-9		
SBF202-10	5/8													SB202-10		
SBF203-11	11/16		3 3/8	2 33/64	19/32	15/32	1	15/32	1.2205	0.8661	0.2362	M10	3/8	SB203-11	F203	0.39
SBF201		12												SB201		
SBF202		15	86	64	15	12	25.5	12	31	22	6			SB202		
SBF203		17												SB203		
SBF204-12	3/4		3 3/8	2 33/64	19/32	15/32	1	15/32	1.2992	0.8661	0.2362	M10	3/8	SB204-12	F204	0.56
SBF204		20	86	64	15	12	25.5	12	33	22	6			SB204		
SBF205-13	13/16													SB205-13		
SBF205-14	7/8		3 3/4	2 3/4	5/8	35/64	1 1/16	15/32	1.3976	1.0630	0.2953	M10	3/8	SB205-14	F205	0.71
SBF205-15	15/16													SB205-15		
SBF205-16	1													SB205-16		
SBF205		25	95	70	16	14	27	12	35.5	27	7.5			SB205		
SBF206-17	1-1/16													SB206-17		
SBF206-18	1-1/8		4 1/4	3 17/64	45/64	35/64	1 7/32	15/32	1.5748	1.1811	0.3150	M10	3/8	SB206-18	F206	1
SBF206-19	1-3/16													SB206-19		
SBF206-20	1-1/4													SB206-20		
SBF206		30	108	83	18	14	31	12	40	30	8			SB206		
SBF207-20	1-1/4													SB207-20		
SBF207-21	1-5/16		4 39/64	3 5/8	3/4	5/8	1 11/32	35/64	1.6732	1.2598	0.3346	M12	7/16	SB207-21	F207	1.33
SBF207-22	1-3/8													SB207-22		
SBF207-23	1-7/16													SB207-23		
SBF207		35	117	92	19	16	34	14	42.5	32	8.5			SB207		
SBF208-24	1-1/2		5 1/8	4 1/64	53/64	5/8	1 13/32	5/8	1.8110	1.3386	0.3543	M14	1/2	SB208-24	F208	1.72
SBF208-25	1-9/16													SB208-25		
SBF208		40	130	102	21	16	36	16	46	34	9			SB208		
SBF209-26	1-5/8													SB209-26		
SBF209-27	1-11/16		5 13/32	4 9/64	55/64	23/32	1 1/2	5/8	2.1142	1.6220	0.3740	M14	1/2	SB209-27	F209	2.27
SBF209-28	1-3/4													SB209-28		
SBF209		45	137	105	22	18	38	16	53.7	41.2	9.5			SB209		
SBF210-29	1-13/16													SB210-29		
SBF210-30	1-7/8		5 5/8	4 3/8	55/64	23/32	1 9/16	5/8	2.1102	1.6378	0.3937	M14	1/2	SB210-30	F210	2.38
SBF210-31	1-15/16													SB210-31		
SBF210-32	2													SB210-32		
SBF210		50	143	111	22	18	40	16	53.6	41.6	10			SB210		
SBF211-32	2													SB211-32		
SBF211-33	2-1/16		6 3/8	5 1/8	63/64	25/32	1 11/16	3/4	2.3031	1.7835	0.4646	M16	5/8	SB211-33	F211	3.44
SBF211-34	2-1/8													SB211-34		
SBF211-35	2-3/16													SB211-35		
SBF211		55	162	130	25	20	43	19	58.5	45.3	11.8			SB211		
SBF212-36	2-1/4													SB212-36		
SBF212-37	2-5/16		6 57/64	5 5/8	1 9/64	25/32	1 7/8	3/4	2.6693	2.1142	0.5866	M16	5/8	SB212-37	F212	3.96
SBF212-38	2-3/8													SB212-38		
SBF212-39	2-7/16													SB212-39		
SBF212		60	175	143	29	20	48	19	67.8	53.7	14.9			SB212		

MVB Power-Star Bearing Industry Co., Ltd. Tel: +86-592-523 0986 Fax: +86-592-376 1975
Url: www.mvbbearing.com Email: vivy@mvbbearing.com ; mvbbearing@gmail.com