# SAF200 Series 带座外球面轴承

## Square 4-Bolt Flange Units

## Mounted Ball Bearing Units

### Nerrow Inner Race, Eccentric Locking, Normal Duty

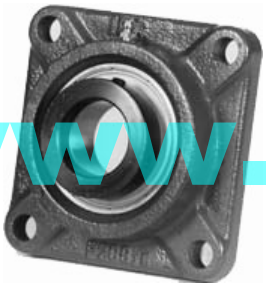

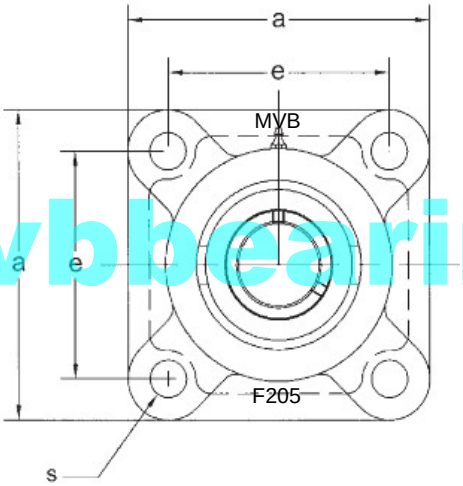


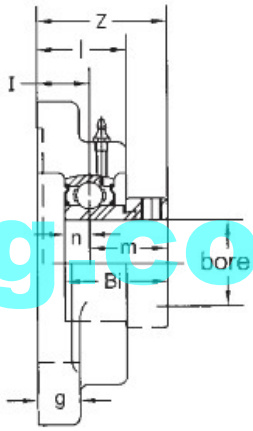


www.mvbbearing.com

| MVB BearingUint No. | Shaft Dia d | | Dimensinons ( inch / mm ) | | | | | | | | | Bolt Size | | Bearing No. | Housing No. | Weight (kg) |
|---|---|---|---|---|---|---|---|---|---|---|---|---|---|---|---|---|
| | (in) | (mm) | a | e | i | g | l | s | z | Bi | n | (mm) | (in) | | | |
| SAF201-8 | 1/2 | | | | | | | | | | | | | SA201-8 | | |
| SAF202-9 | 9/16 | | | | | | | | | | | | | SA202-9 | | |
| SAF202-10 | 5/8 | | | | | | | | | | | | | SA202-10 | | |
| SAF203-11 | 11/16 | | 3 3/8 | 2 33/64 | 19/32 | 15/32 | 1 | 15/32 | 1.4803 | 1.1260 | 0.2362 | M10 | 3/8 | SA203-11 | F203 | 0.42 |
| SAF201 | | 12 | | | | | | | | | | | | SA201 | | |
| SAF202 | | 15 | 86 | 64 | 15 | 12 | 25.5 | 12 | 37.6 | 28.6 | 6 | | | SA202 | | |
| SAF203 | | 17 | | | | | | | | | | | | SA203 | | |
| SAF204-12 | 3/4 | | 3 3/8 | 2 33/64 | 19/32 | 15/32 | 1 | 15/32 | 1.5354 | 1.2205 | 0.2756 | M10 | 3/8 | SA204-12 | F204 | 0.58 |
| SAF204 | | 20 | 86 | 64 | 15 | 12 | 25.5 | 12 | 39 | 31 | 7 | | | SA204 | | |
| SAF205-13 | 13/16 | | | | | | | | | | | | | SA205-13 | | |
| SAF205-14 | 7/8 | | 3 3/4 | 2 3/4 | 5/8 | 35/64 | 1 1/16 | 15/32 | 1.5551 | 1.2205 | 0.2953 | M10 | 3/8 | SA205-14 | F205 | 0.73 |
| SAF205-15 | 15/16 | | | | | | | | | | | | | SA205-15 | | |
| SAF205-16 | 1 | | | | | | | | | | | | | SA205-16 | | |
| SAF205 | | 25 | 95 | 70 | 16 | 14 | 27 | 12 | 39.5 | 31 | 7.5 | | | SA205 | | |
| SAF206-17 | 1-1/16 | | | | | | | | | | | | | SA206-17 | | |
| SAF206-18 | 1-1/8 | | 4 1/4 | 3 17/64 | 45/64 | 35/64 | 1 7/32 | 15/32 | 1.7992 | 1.4055 | 0.3150 | M10 | 3/8 | SA206-18 | F206 | 1.08 |
| SAF206-19 | 1-3/16 | | | | | | | | | | | | | SA206-19 | | |
| SAF206-20 | 1-1/4 | | | | | | | | | | | | | SA206-20 | | |
| SAF206 | | 30 | 108 | 83 | 18 | 14 | 31 | 12 | 45.7 | 35.7 | 8 | | | SA206 | | |
| SAF207-20 | 1-1/4 | | | | | | | | | | | | | SA207-20 | | |
| SAF207-21 | 1-5/16 | | 4 39/64 | 3 5/8 | 3/4 | 5/8 | 1 11/32 | 35/64 | 1.9449 | 1.5315 | 0.3346 | M12 | 7/16 | SA207-21 | F207 | 1.46 |
| SAF207-22 | 1-3/8 | | | | | | | | | | | | | SA207-22 | | |
| SAF207-23 | 1-7/16 | | | | | | | | | | | | | SA207-23 | | |
| SAF207 | | 35 | 117 | 92 | 19 | 16 | 34 | 14 | 49.4 | 38.9 | 8.5 | | | SA207 | | |
| SAF208-24 | 1-1/2 | | 5 1/8 | 4 1/64 | 53/64 | 5/8 | 1 13/32 | 5/8 | 2.1929 | 1.7205 | 0.3543 | M14 | 1/2 | SA208-24 | F208 | 1.8 |
| SAF208-25 | 1-9/16 | | | | | | | | | | | | | SA208-25 | | |
| SAF208 | | 40 | 130 | 102 | 21 | 16 | 36 | 16 | 55.7 | 43.7 | 9 | | | SA208 | | |
| SAF209-26 | 1-5/8 | | | | | | | | | | | | | SA209-26 | | |
| SAF209-27 | 1-11/16 | | 5 13/32 | 4 9/64 | 55/64 | 23/32 | 1 1/2 | 5/8 | 2.2126 | 1.7205 | 0.3740 | M14 | 1/2 | SA209-27 | F209 | 2.2 |
| SAF209-28 | 1-3/4 | | | | | | | | | | | | | SA209-28 | | |
| SAF209 | | 45 | 137 | 105 | 22 | 18 | 38 | 16 | 56.2 | 43.7 | 9.5 | | | SA209 | | |
| SAF210-29 | 1-13/16 | | | | | | | | | | | | | SA210-29 | | |
| SAF210-30 | 1-7/8 | | 5 5/8 | 4 3/8 | 55/64 | 23/32 | 1 9/16 | 5/8 | 2.1929 | 1.7205 | 0.3937 | M14 | 1/2 | SA210-30 | F210 | 2.45 |
| SAF210-31 | 1-15/16 | | | | | | | | | | | | | SA210-31 | | |
| SAF210-32 | 2 | | | | | | | | | | | | | SA210-32 | | |
| SAF210 | | 50 | 143 | 111 | 22 | 18 | 40 | 16 | 55.7 | 43.7 | 10 | | | SA210 | | |
| SAF211-32 | 2 | | | | | | | | | | | | | SA211-32 | | |
| SAF211-33 | 2-1/16 | | 6 3/8 | 5 1/8 | 63/64 | 25/32 | 1 11/16 | 3/4 | 2.3031 | 1.9055 | 0.4724 | M16 | 5/8 | SA211-33 | F211 | 3.18 |
| SAF211-34 | 2-1/8 | | | | | | | | | | | | | SA211-34 | | |
| SAF211-35 | 2-3/16 | | | | | | | | | | | | | SA211-35 | | |
| SAF211 | | 55 | 162 | 130 | 25 | 20 | 43 | 19 | 58.5 | 48.4 | 12 | | | SA211 | | |
| SAF212-36 | 2-1/4 | | | | | | | | | | | | | SA212-36 | | |
| SAF212-37 | 2-5/16 | | 6 57/64 | 5 5/8 | 1 9/64 | 25/32 | 1 7/8 | 3/4 | 2.7598 | 2.0906 | 0.4724 | M16 | 5/8 | SA212-37 | F212 | 3.97 |
| SAF212-38 | 2-3/8 | | | | | | | | | | | | | SA212-38 | | |
| SAF212-39 | 2-7/16 | | | | | | | | | | | | | SA212-39 | | |
| SAF212 | | 60 | 175 | 143 | 29 | 20 | 48 | 19 | 70.1 | 53.1 | 12 | | | SA212 | | |

MVB Power-Star Bearing Industry Co., Ltd. Tel: +86-592-523 0986 Fax: +86-592-376 1975
Url: www.mvbbearing.com Email: vivy@mvbbearing.com ; mvbbearing@gmail.com