HCF200 Series 带座外球面轴承

Square 4-Bolt Flange Units

Mounted Ball Bearing Units

Wide Inner Race, Eccentric Collar Locking, Normal Duty

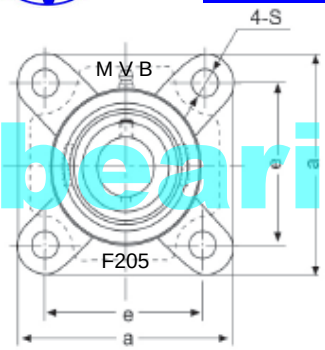

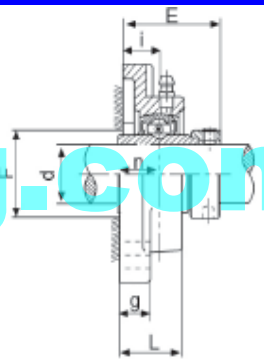

www.mvbbearing.com

MVB BearingUint No.	Shaft Dia d (in)	Shaft Dia d (mm)	Dimensinons (inch) / (mm) a	e	i	g	L	s	E	n	F	Bolt Size (mm)	Bolt Size (in)	Bearing No.	Housing No.	Weight (kg)
HCF201-8S	1/2													HC201-8S		
HCF202-9S	9/16		2.9921	2.1260	19/32	0.4331	1.0000	15/32	1.2205	0.3937				HC202-9S		
HCF202-10S	5/8													HC202-10S		
HCF203-11S	11/16										-	M10	3/8	HC203-11S	F203	0.66
HCF201S		12												HC201S		
HCF202S		15	76	54	15	11	25.5	11.5	31	10				HC202S		
HCF203S		17												HC203S		
HCF201-8	1/2													HC201-8		
HCF202-9	9/16													HC202-9		
HCF202-10	5/8		3 3/8	2 33/64	19/32	15/32	1	15/32	1.3110	0.5000	1.2205			HC202-10		
HCF203-11	11/16													HC203-11		
HCF204-12	3/4											M10	3/8	HC204-12	F204	0.61
HCF201		12												HC201		
HCF202		15	86	64	15	12	25.5	12	33.3	12.7	31			HC202		
HCF203		17												HC203		
HCF204		20												HC204		
HCF205-13	13/16													HC205-13		
HCF205-14	7/8		3 3/4	2 3/4	5/8	35/64	1 1/16	15/32	1.4094	0.5630	1.4173	M10	3/8	HC205-14		
HCF205-15	15/16													HC205-15	F205	0.86
HCF205-16	1													HC205-16		
HCF205		25	95	70	16	14	27	12	35.8	14.3	36			HC205		
HCF206-17	1-1/16													HC206-17		
HCF206-18	1-1/8		4 1/4	3 17/64	45/64	35/64	1 7/32	15/32	1.5827	0.6260	1.6535	M10	3/8	HC206-18		
HCF206-19	1-3/16													HC206-19	F206	1.1
HCF206-20	1-1/4													HC206-20		
HCF206		30	108	83	18	14	31	12	40.2	15.9	42			HC206		
HCF207-20	1-1/4													HC207-20		
HCF207-21	1-5/16		4 39/64	3 5/8	3/4	5/8	1 11/32	35/64	1.7480	0.6890	1.9685	M12	7/16	HC207-21		
HCF207-22	1-3/8													HC207-22	F207	1.6
HCF207-23	1-7/16													HC207-23		
HCF207		35	117	92	19	16	34	14	44.4	17.5	50			HC207		
HCF208-24	1-1/2		5 1/8	4 1/64	53/64	5/8	1 13/32	5/8	2.0157	0.7480	2.1654	M14	1/2	HC208-24		
HCF208-25	1-9/16													HC208-25	F208	1.9
HCF208		40	130	102	21	16	36	16	51.2	19	55			HC208		
HCF209-26	1-5/8										-			HC209-26		
HCF209-27	1-11/16		5 13/32	4 9/64	55/64	23/32	1 1/2	5/8	2.0551	0.7480		M14	1/2	HC209-27	F209	2.4
HCF209-28	1-3/4													HC209-28		
HCF209		45	137	105	22	18	38	16	52.2	19	-			HC209		
HCF210-29	1-13/16													HC210-29		
HCF210-30	1-7/8		5 5/8	4 3/8	55/64	23/32	1 9/16	5/8	2.1496	0.7480	2.5197	M14	1/2	HC210-30		
HCF210-31	1-15/16													HC210-31	F210	2.6
HCF210-32	2													HC210-32		
HCF210		50	143	111	22	18	40	16	54.6	19	64			HC210		
HCF211-32	2													HC211-32		
HCF211-33	2-1/16		6 3/8	5 1/8	63/64	25/32	1 11/16	3/4	2.2992	0.8740	2.7953	M16	5/8	HC211-33		
HCF211-34	2-1/8													HC211-34	F211	3.5
HCF211-35	2-3/16													HC211-35		
HCF211		55	162	130	25	20	43	19	58.4	22.2	71			HC211		
HCF212-36	2-1/4													HC212-36		
HCF212-37	2-5/16		6 57/64	5 5/8	1 9/64	25/32	1 7/8	3/4	2.7047	1.0000	3.0315	M16	5/8	HC212-37		
HCF212-38	2-3/8													HC212-38	F212	4.2
HCF212-39	2-7/16													HC212-39		
HCF212		60	175	143	29	20	48	19	68.7	25.4	77			HC212		
HCF213-40	2-1/2		7 23/64	5 55/64	1 3/16	55/64	1 31/32	3/4	2.7441	1.0000	3.3071	M16	5/8	HC213-40		
HCF213-41	2-9/16													HC213-41	F213	5.3
HCF213		65	187	149	30	22	50	19	69.7	25.4	84			HC213		
HCF214-42	2-5/8													HC214-42		
HCF214-43	2-11/16		7 19/32	5 63/64	1 7/32	55/64	2 1/8	3/4	2.9685	1.1890	3.5039	M16	5/8	HC214-43		
HCF214-44	2-3/4													HC214-44	F214	5.5
HCF214		70	193	152	31	22	54	19	75.4	30.2	89			HC214		
HCF215-45	2-13/16													HC215-45		
HCF215-46	2-7/8		7 7/8	6 17/64	1 11/32	55/64	2 7/32	3/4	3.0906	1.3110	3.7008	M16	5/8	HC215-46		
HCF215-47	2-15/16													HC215-47	F215	6.2
HCF215-48	3													HC215-48		
HCF215		75	200	159	34	22	56	19	78.5	33.3	94			HC215		
HCF216-50	3-1/8		8 3/16	6 1/2	1 11/32	55/64	2 9/32	29/32	3.2795	1.3110	101	M20	3/4	HC216-50	F216	7.7
HCF216		80	208	165	34	22	58	23	83.3	33.3	101			HC216		
HCF217-52	3-1/4		8 21/32	6 57/64	1 27/64	15/16	2 15/32	29/32	3.4488	1.3425	-	M20	3/4	HC217-52	F217	9
HCF217		85	220	175	36	24	63	23	87.6	34.1	-			HC217		
HCF218-56	3-1/2		9 1/4	7 23/64	1 37/64	15/16	2 11/16	29/32	3.7913	1.5630	-	M20	3/4	HC218-56	F218	11.3
HCF218		90	235	187	40	24	68	23	96.3	39.7	-			HC218		

NOTE: Open / Close (S/SM) Covers are opional.

MVB Power-Star Bearing Industry Co., Ltd. Tel: +86-592-523 0986 Fax: +86-592-376 1975
Url: www.mvbbearing.com Email: vivy@mvbbearing.com ; mvbbearing@gmail.com